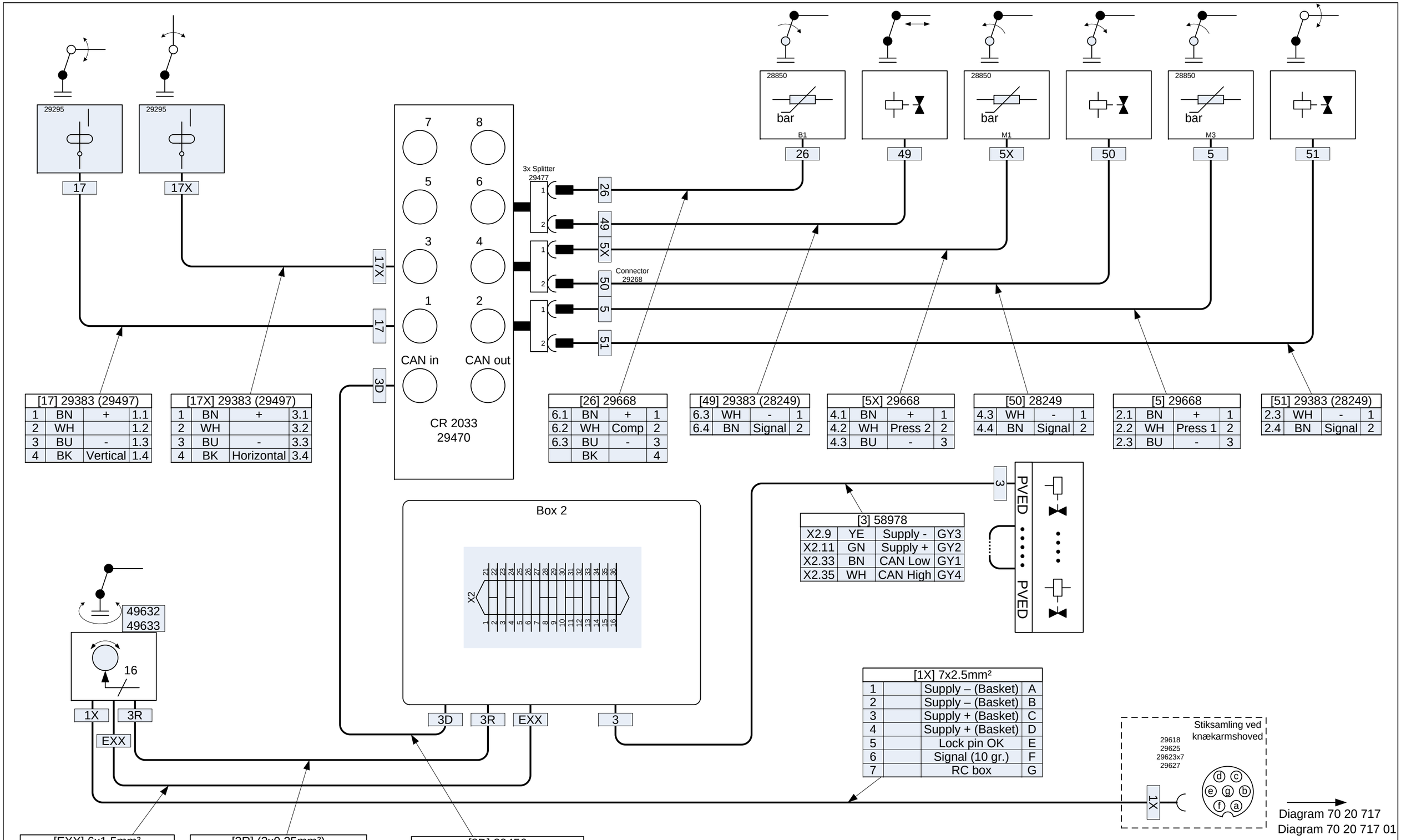

[17] 29383 (29497)			
1	BN	+	1.1
2	WH		1.2
3	BU	-	1.3
4	BK	Vertical	1.4

[17X] 29383 (29497)			
1	BN	+	3.1
2	WH		3.2
3	BU	-	3.3
4	BK	Horizontal	3.4

[26] 29668			
6.1	BN	+	1
6.2	WH	Comp	2
6.3	BU	-	3
	BK		4

[49] 29383 (28249)			
6.3	WH	-	1
6.4	BN	Signal	2

[5X] 29668			
4.1	BN	+	1
4.2	WH	Press 2	2
4.3	BU	-	3

[50] 28249			
4.3	WH	-	1
4.4	BN	Signal	2

[5] 29668			
2.1	BN	+	1
2.2	WH	Press 1	2
2.3	BU	-	3

[51] 29383 (28249)			
2.3	WH	-	1
2.4	BN	Signal	2

[3] 58978			
X2.9	YE	Supply -	GY3
X2.11	GN	Supply +	GY2
X2.33	BN	CAN Low	GY1
X2.35	WH	CAN High	GY4

[1X] 7x2.5mm²			
1		Supply – (Basket)	A
2		Supply – (Basket)	B
3		Supply + (Basket)	C
4		Supply + (Basket)	D
5		Lock pin OK	E
6		Signal (10 gr.)	F
7		RC box	G

[EXX] 6x1.5mm²			
1 (8)	1 WH	- RCL	X2.27
2 (9)	2 BN	+ RCL	X2.30
3 (10)	3 GN	Light -	X2.21
4 (11)	4 YE	Light +	X2.23
5 (12)	5 GY	+	X2.25
6 (13)	6BU	Boom	X2.26

[3R] (2x0.25mm²)			
7 (14)	SCREEN	GND	Clamp
8 (15)	BN	CAN L	X2.13
9 (16)	WH	CAN H	X2.15

[3D] 29456			
1	SHIELD	GND	Clamp
3	BK	Supply -	X2.8
2	RD	Supply +	X2.10
5	BU	CAN Low	X2.14
4	WH	CAN Hight	X2.16

Anvendes på serie
6020K – 8520K

Revision		
Nr.	Date	Sign.
A	06.07.2015	BSO
B	14.08.2015	BSO

Product: RCL 5300

Part: Column, G3 - Basket

Højbjerg Maskinfabrik a/s
Oddervej 200 - DK-8270 Højbjerg

Date: 06.07.2015
Sign.: BSO
Drawing size: A3
Replacing
Drawing nr.: 70 20 716
Rep. by